Hongxin New Energy Technology (Yunnan) Co., LTD

	HXKJ-Q-QPJS-034		
	A0		

DEPARTME
TNAME

COUNTER
SIGNER

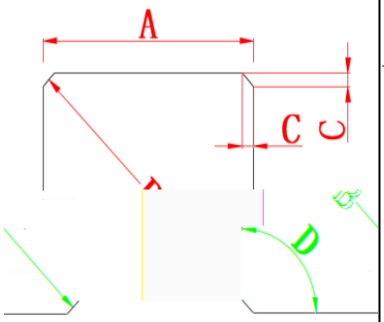

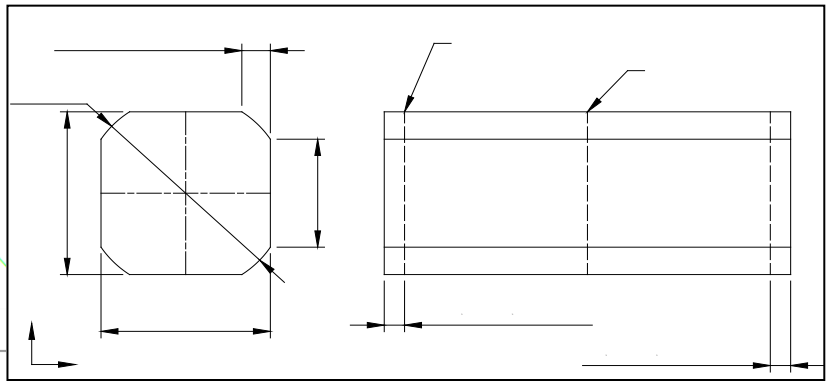

			≤		
			¼		
	≤				

	Ω	Ω Ω	Ω	Ω
	≥	≥	≥	≥
			≥	≥
	≤	≤	≤	
	≤	≤	≤	≤
	≤	≤	≤	≤
	±	±	±	±

“ ”

≤

√ ”　　“ × ”